Hold My Coffee

Active Beverage Stabilization Platform

Team Badgers

RoboTEC 2026 Freestyle Showcase University

Team Members: Sebastian-Alexandru Matei
Year of Study: 3

Valentin Pletea-Marinescu
Year of Study: 4

University: National University of Science and Technology
POLITEHNICA Bucharest, Romania

Faculty: Faculty of Automatic Control and Computer Science
Faculty of Engineering in Foreign Languages

Coordinator: Prof. Ioan-Ștefan Sacală

Contents

Acronyms **4**

1 Introduction **5**

2 Current State of the Field **5**

3 Hardware Resources **6**

4 Software Resources **7**

5 Hardware Implementation **7**
- 5.1 System Architecture . . . 7
- 5.2 Communication Architecture . . . 8
- 5.3 Embedded Motor Controller Configuration . . . 8
- 5.4 Mechanical Assembly . . . 8

6 Software Implementation **9**
- 6.1 Angle Computation and Wraparound . . . 9
- 6.2 System Identification . . . 9
- 6.3 PID Controller Design (SIMC Tuning) . . . 9
- 6.4 RST Controller Design (Pole Placement) . . . 10
  - 6.4.1 Discrete-Time Plant Models . . . 10
  - 6.4.2 RST Controller Structure . . . 10
  - 6.4.3 Impact of Cascaded Architecture . . . 10
  - 6.4.4 Nelder–Mead Tuning Procedure . . . 10
- 6.5 LQG Controller Design . . . 11
  - 6.5.1 State-Space Realization . . . 11
  - 6.5.2 LQR Gain Design . . . 11
  - 6.5.3 Kalman Filter Design . . . 11
  - 6.5.4 Discrete-Time Implementation . . . 12
  - 6.5.5 Control Law . . . 12
- 6.6 MRAC Design (Model Reference Adaptive Control) . . . 12
  - 6.6.1 Plant Parameter and Adaptation Rate . . . 12
  - 6.6.2 Reference Model . . . 13
  - 6.6.3 Control and Adaptation Laws . . . 13
- 6.7 Height Control . . . 13

7 Experimental Results **13**
- 7.1 Test Scenarios . . . 13
- 7.2 Composite Performance Assessment (CPA) . . . 13
- 7.3 Steady-State Tracking Performance . . . 14
- 7.4 Disturbance Rejection Performance . . . 14
- 7.5 CPA Summary . . . 15

8 Conclusions **16**
8.1 Highlights 16
8.2 Challenges 17
8.3 Future Work 17

List of Figures

1 3D model of the complete stabilization platform 6
2 3D model of the automatic tilting mechanism 6
3 High-level block diagram of the cascaded control architecture for pitch/roll stabilization. . . . 7
4 Communication architecture showing data buses between all system components. 8
5 CPA scores across all conditions. P=Pitch, R=Roll, S=Steady, D=Disturbance. Lower is better. 15
6 Error time series for all controllers across three payload configurations. 16

List of Tables

1 Hardware Components and Specifications 6
2 Software Tools and Libraries 7
3 Embedded Moteus Motor Controller PID Parameters 8
4 RST Controller Parameters 11
5 LQG Controller Parameters 12
6 CPA Weights and Normalization Bounds 14
7 Steady-State Performance Roll Axis 14
8 Steady-State Performance Pitch Axis 14
9 Disturbance Rejection Roll Axis 14
10 Disturbance Rejection Pitch Axis 14

Acronyms

CE Control Effort

CPA Composite Performance Assessment

DOF Degree of Freedom

FDCAN Flexible Data-rate Controller Area Network

I^2C Inter-Integrated Circuit

SPI Serial Peripheral Interface

FOC Field-Oriented Control

IAE Integral Absolute Error

IMU Inertial Measurement Unit

LQG Linear Quadratic Gaussian

LQR Linear Quadratic Regulator

MRAC Model Reference Adaptive Control

PID Proportional-Integral-Derivative

RMSE Root Mean Square Error

RST R-S-T Polynomial Controller

SIMC Skogestad Internal Model Control

ToF Time-of-Flight

UART Universal Asynchronous Receiver-Transmitter

PWM Pulse Width Modulation

USB Universal Serial Bus

MPC Model Predictive Control

UAV Unmanned Aerial Vehicle

1 Introduction

Hold My Coffee is a 3-DOF active stabilization platform capable of holding its surface parallel to ground to support a cup or mug despite external forces or movement of its carrying platform. It rejects disturbances applied to the platform through control of **pitch**, **roll**, and **vertical translation** due to walking, stopping abruptly, or minor bumps to keep from sloshing liquids around or spilling them.

The project goals are to:

1. Design, build, and demonstrate a portable battery-powered drink stabilization platform using embedded controllers and brushless motor actuation.
2. Conduct an apples-to-apples experimental comparison of four controllers, PID, RST, LQG,and MRAC,and rank their real-time performance under various payloads using a custom CPA metric.

The hardware platform uses two microcontrollers. Teensy 4.1 (ARM Cortex-M7 @ 600 MHz) is responsible for stabilizing pitch and roll using FDCAN to command three Moteus r4.11 motor controllers. An Arduino UNO controls the height against a ToF distance sensor. Controllers run at roughly 40 Hz in the outer loop (mean period 24 ms) with the motor drives operating FOC-based inner current/position loops at a few kilohertz.

A custom Composite Performance Assessment (CPA) index is derived that combines several standard metrics IAE, overshoot, RMSE, and Control Effort (CE) into weighted scores that can consistently rank controllers during steady state regulation and rejection of disturbances. Repeatable disturbances are injected into the system with a servo-driven tilting mechanism.

2 Current State of the Field

Actively controlled stabilization platforms exist across aerospace and robotics disciplines, including maritime platforms [1], camera gimbals [2]. Onboard stabilization typically requires rejection of external disturbances and tracking of a specified payload attitude despite uncertain dynamics and sensor noise. Embedded stabilization with unknown or uncertain dynamics becomes difficult when onboard resources limit controller complexity [3]. Lee et al. [4] presented a double active control system for disturbance suppression on a two-axis gimbal platform. Hu et al. [5] designed friction compensation ADRC for a gimbal using a LuGre model. Feng and Zhang [6] designed an adaptive sliding-mode controller on three-axis platforms, and Song et al. [7] derived and experimentally validate a novel series architecture on a similar system.

Portable beverage stabilization is an applied example of this general problem. A camera gimbal or weapon stabilizer, for instance, has fixed mass properties after it is configured. The level of liquid in a beverage container rises as the contents are depleted, dynamically shifting inertia and center-of-mass properties [8]. Finally, the commanded motion must be smooth enough to avoid inducing liquid sloshing [9], adding an extra constraint to stabilization not present in other fields.

Simple PID controllers remain prevalent in industry for their ease of design, robustness, and simplicity [10, 11, 12]. Gimbal servo disturbance suppression has previously been addressed using combined ADRC and integral sliding-mode [13]. Recent work benchmarking several families of controllers on servo and mechatronic systems revealed that while optimal controllers such as LQR and sliding-mode can outperform classical PID designs in niche applications, tuning can be more difficult and improvements are marginal or application specific [14]. Industrial MPC applications have been demonstrated to outperform PID controllers in certain constrained multivariable processes [15].

To our knowledge, there have been few works which directly compare multiple controller topologies across shared embedded hardware. Okasha and Taha [16] make a comparison between PID, LQR, and MPC on mini-UAV, Valluru et al. [17] compare PID and LQG on cart-inverted pendulum setup and Karabacak et al. [18]

compare state-feedback and PID controllers on a magnetic levitation system. Adaptive control was used by Chen and Yang [19] for stabilization of a tank stabilizer, showing promise of model-reference techniques on dynamic platforms. This work is the first to compare PID, RST, LQG, and MRAC on a common embedded stabilization platform with identical metrics and test scenarios.

3 Hardware Resources

The hardware platform is summarized in Table 1.

Table 1: Hardware Components and Specifications

Component	Description	Interface
Teensy 4.1	NXP i.MX RT1062 ARM Cortex-M7 @ 600 MHz; main controller for pitch/roll stabilization	USB, FDCAN, I^2C, UART
Arduino UNO ($\times$2)	ATmega328P; one for height control + ToF, one for tilt mechanism	UART, I^2C
Moteus r4.11 ($\times$3)	Brushless motor controller with on-board FOC; position, velocity, and torque modes	FDCAN @ 1 Mbps
mj5208 ($\times$3)	Brushless DC motors for pitch, roll, and height actuation	—
Adafruit BNO055 ($\times$2)	9-DOF IMU; NDOF mode, drift-free quaternions at $\sim$100 Hz	I^2C (0x28)
VL53L0X	ToF laser distance sensor	I^2C
DS5180 servos ($\times$3)	80 kg·cm torque, 270° rotation, 8.4 V; automated tilt mechanism	PWM
MGN12H rails	Linear rail assemblies for low-friction vertical guidance	—
T8 lead screw	2 mm pitch; converts motor rotation into vertical translation	—
HRB 4S LiPo	6000 mAh, 14.8 V nominal, 50 C discharge	—
Buck converter	Provides regulated 5 V rail for microcontrollers	—

The mechanical structure is 3D-printed in ABS/PETG plastic, mounted on aluminum extrusion profiles for rigidity and modularity. A waterproof ignition-protected 300 A switch, automotive-style fuses, and low-voltage monitoring circuitry ensure safe operation from the LiPo battery.

Figure 1: 3D model of the complete stabilization platform

Figure 2: 3D model of the automatic tilting mechanism

4 Software Resources

The project relies on the following software tools and libraries:

Table 2: Software Tools and Libraries

Tool / Library	Purpose
Arduino IDE / PlatformIO	Firmware development and flashing for Teensy 4.1 and Arduino UNO
Teensyduino	Arduino-compatible core and libraries for Teensy 4.1
ACAN_T4	FlexCAN FD library for FDCAN communication at 1 Mbps
Moteus Arduino Library	High-level API for commanding Moteus motor controllers
Adafruit BNO055 Library	Driver for BNO055 9-DOF IMU (quaternion output)
Adafruit VL53L0X Library	Driver for VL53L0X Time-of-Flight sensor
SD Library	On-board SD card data logging on Teensy
MATLAB R2024b	System identification, controller design, and data analysis
System Identification Toolbox	OE and N4SID model estimation for transfer function identification
Control System Toolbox	LQR, LQE, pole-placement, Bode/step analysis

The repository[1] is organized as follows:

- `firmware/teensy/` Main stabilization firmware (PID, RST, LQG, MRAC)
- `firmware/arduino_uno/` Height control firmware
- `scripts/` MATLAB scripts for identification, design, and analysis
- `datasets/` Experimental identification and controller log data (CSV/MAT)

5 Hardware Implementation

5.1 System Architecture

The platform employs a cascaded control architecture with two levels:

- **Outer loop (∼40 Hz, avg. 24 ms)**: Runs on the Teensy 4.1. Computes motor position setpoints from IMU measurements using one of four selectable control algorithms.
- **Inner loop (>1 kHz)**: Runs on each Moteus r4.11 motor controller. Tracks position commands using on-board FOC current and position PID loops.

Figure 3 shows the high-level block diagram of the system.

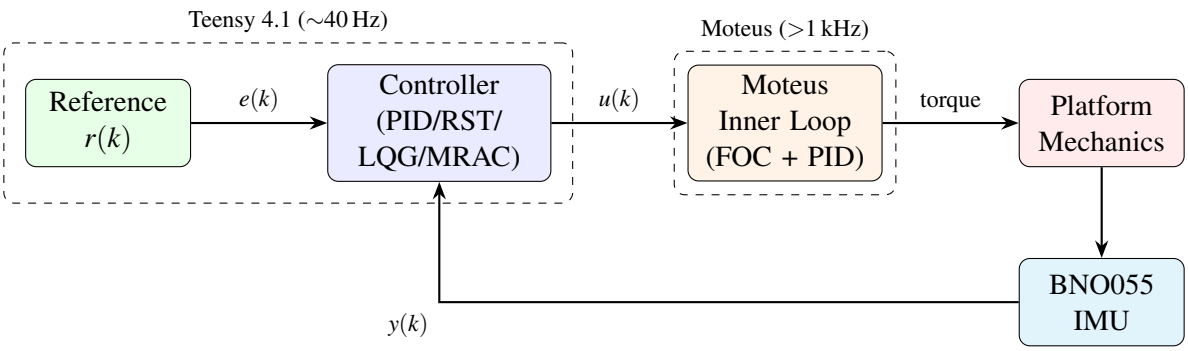

Figure 3: High-level block diagram of the cascaded control architecture for pitch/roll stabilization.

[1] https://github.com/Pletea-Marinescu-Valentin/Stabilization-Platform

5.2 Communication Architecture

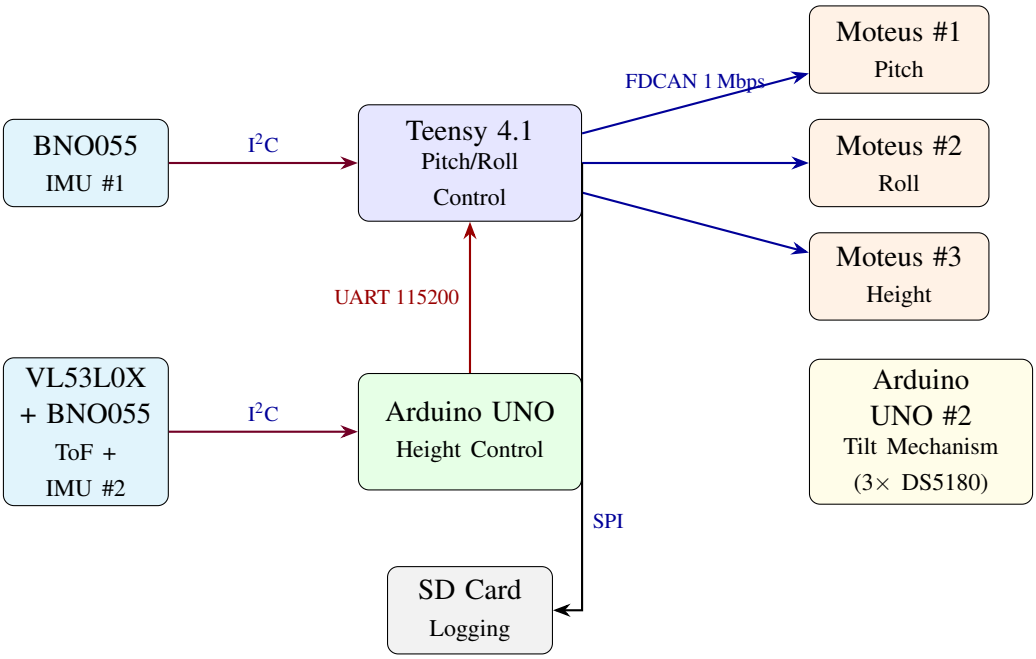

Figure 4: Communication architecture showing data buses between all system components.

5.3 Embedded Motor Controller Configuration

Each Moteus r4.11 motor controller contains two PID control loops: a low-level current control loop (`pid_dq`) achieving Field-Oriented Control, and a high-level position controller (`pid_position`) tracking commanded setpoints. The tuned parameters are shown in Table 3.

Table 3: Embedded Moteus Motor Controller PID Parameters

Motor	**Current Loop**		**Position Loop**		
	K_p	K_i	K_p	K_i	K_d
Pitch (ID 1)	0.3	5.0	30.0	0.1	0.3
Roll (ID 2)	0.3	2.0	15.0	0.2	0.1
Height (ID 3)	0.03	59.7	4.0	1.0	0.05

5.4 Mechanical Assembly

The platform features:

- A 3D-printed ABS/PETG tray assembly that holds the beverage container.
- Aluminum extrusion profiles forming the structural frame.
- MGN12H linear rail assemblies paired with a T8 lead screw (2 mm pitch) for vertical translation.
- Three mj5208 brushless motors: two for pitch/roll actuation, one for vertical motion.

The automated tilt mechanism consists of three DS5180 servos (80 kg·cm torque, 270° rotation, 8.4 V) controlled by a separate Arduino UNO. This mechanism rotates the platform base during experiments to introduce systematic, repeatable disturbances.

6 Software Implementation

6.1 Angle Computation and Wraparound

Pitch and roll angles are computed from BNO055 quaternions (w,x,y,z):

$$\phi = \operatorname{atan2}\big(2(wx+yz),\ 1-2(x^2+y^2)\big) \tag{1}$$

$$\theta = \begin{cases} \operatorname{sign}(\sin p)\cdot\frac{\pi}{2}, & |\sin p| \geq 1 \\ \arcsin(\sin p), & \text{otherwise} \end{cases} \tag{2}$$

where $\sin p = 2(wy - zx)$. The angular position error is computed using a trigonometric normalization that correctly handles the $\pm 180^\circ$ discontinuity on the roll axis:

$$\Delta\theta = \operatorname{atan2}\left(\sin\left(\Delta\theta\cdot\frac{\pi}{180}\right),\ \cos\left(\Delta\theta\cdot\frac{\pi}{180}\right)\right)\cdot\frac{180}{\pi} \tag{3}$$

6.2 System Identification

Transfer function models for both axes were identified from experimental data using the System Identification Toolbox in MATLAB. Motor position was excited using a pseudo-SPAB signal, and input–output trajectories were logged at 31.7 Hz.

A grid search over Output-Error (OE) models with orders $n_a, n_b \in \{1,\ldots,5\}$ and delays $n_k \in \{0,\ldots,3\}$ was performed, alongside N4SID subspace models of order 1 through 10. The best models were then converted to continuous-time, balanced, and truncated to second order.

Roll axis (88.29% fit, N4SID order 10 $\rightarrow$ 2nd order):

$$G_r(s) = \frac{-0.02478\,s^2 + 1.665\,s - 86.37}{s^2 + 7.67\,s + 2023} \tag{4}$$

Pitch axis (93.49% fit, N4SID order 9 $\rightarrow$ 2nd order):

$$G_p(s) = \frac{-0.0347\,s^2 + 2.379\,s - 78.92}{s^2 + 6.256\,s + 683.5} \tag{5}$$

From the denominators, the natural frequencies and damping ratios are:

- Roll: $\omega_{0,r} = \sqrt{2023} \approx 44.98\,\text{rad/s}$, $\quad \zeta_r \approx 0.0853$, $\quad K_{\text{dc,roll}} \approx 0.0427$
- Pitch: $\omega_{0,p} = \sqrt{683.5} \approx 26.14\,\text{rad/s}$, $\quad \zeta_p \approx 0.1196$, $\quad K_{\text{dc,pitch}} \approx 0.1155$

6.3 PID Controller Design (SIMC Tuning)

PID controllers were designed using SIMC tuning rules [20] for underdamped second-order processes. Each transfer function denominator is written in standard form $s^2 + 2\zeta\omega_0 s + \omega_0^2$, from which ω_0 and ζ are extracted. The steady-state gain is $K_{\text{dc}} = |G(0)|$.

A closed-loop time constant $\lambda = 2\,\text{s}$ was chosen for both axes. The integral and derivative times are set as $T_i = 10\lambda = 20\,\text{s}$ and $T_d = 1/\omega_0$. The controller gains follow from:

$$K_P = \frac{2\zeta}{K_{\text{dc}}\,\omega_0\,\lambda}, \qquad K_I = \frac{K_P}{T_i}, \qquad K_D = K_P\cdot T_d \tag{6}$$

Resulting embedded parameters:

- **Roll:** $K_P = 0.044402$, $K_I = 0.002220$, $K_D = 0.000987$

- **Pitch:** $K_P = 0.039635$, $K_I = 0.001982$, $K_D = 0.001516$

The PID law is implemented in incremental form with integral clamping at ± 50 to prevent windup and derivative action based on error differences rather than output differentiation.

6.4 RST Controller Design (Pole Placement)

The RST controller [21] is designed in discrete time from the identified models (4)–(5) with sampling period $T_s = 0.0317\,\text{s}$. Discretization is performed using the bilinear (Tustin) transformation, a stability-preserving mapping for digital control.

6.4.1 Discrete-Time Plant Models

Tustin discretization yields, for the roll axis:

$$G_r(z) = \frac{0.01233\,z^2 - 0.003782\,z + 0.04471}{z^2 - 0.6035\,z + 0.8508} \tag{7}$$

with backward-shift polynomials $A_r(z^{-1}) = 1 - 0.6035\,z^{-1} + 0.8508\,z^{-2}$ and $B_r(z^{-1}) = 0.01233 - 0.003782\,z^{-1} + 0.04471\,z^{-2}$.

For the pitch axis:

$$G_p(z) = \frac{0.01323\,z^2 - 0.02341\,z + 0.07258}{z^2 - 1.304\,z + 0.844} \tag{8}$$

with $A_p(z^{-1}) = 1 - 1.304\,z^{-1} + 0.844\,z^{-2}$ and $B_p(z^{-1}) = 0.01323 - 0.02341\,z^{-1} + 0.07258\,z^{-2}$.

6.4.2 RST Controller Structure

The control law follows the classical polynomial framework:

$$R(z^{-1})\,u(k) = T(z^{-1})\,r(k) - S(z^{-1})\,y(k) \tag{9}$$

where the controller polynomials are chosen as $R(z^{-1}) = 1 + r_1 z^{-1} + r_2 z^{-2}$ (monic for causal implementation), $S(z^{-1}) = s_0 + s_1 z^{-1}$ (output feedback shaping), and $T(z^{-1}) = T_0$ (reference feedforward gain). The resulting closed-loop transfer function is:

$$G_{\text{cl}}(z) = \frac{T_0\,B(z^{-1})}{A(z^{-1})\,R(z^{-1}) + B(z^{-1})\,S(z^{-1})} \tag{10}$$

The recursive implementation is:

$$u(k) = -r_1\,u(k-1) - r_2\,u(k-2) + T_0\,r(k) - s_0\,y(k) - s_1\,y(k-1) \tag{11}$$

6.4.3 Impact of Cascaded Architecture

The RST controller operates as an outer-loop regulator whose output is fed to the Moteus position controller. The inner closed-loop dynamics $G_{\text{inner,cl}}(z)$, which include FOC current control and position PID, are proprietary and cannot be modelled analytically. This means the RST parameters must be determined through direct numerical optimization rather than explicit pole-placement computation.

6.4.4 Nelder–Mead Tuning Procedure

The tuning procedure is as follows:

1. Set initial controller parameters to conservative estimates: $r_1^0 = 0$, $s_0^0 = 0.05$, $s_1^0 = 0.01$, $T_0^0 = 0.05$.
2. Numerically optimize parameters to minimize a discrete-time step-response tracking cost:

$$J = \sum_{k=1}^{N} \big(y(k) - r(k)\big)^2 \tag{12}$$

   where $y(k)$ is the closed-loop response of (10). Optimization uses the **Nelder–Mead simplex algorithm**, which is derivative-free and well-suited for noisy cost landscapes.
3. Uniformly scale all resulting parameters to enforce $T_{\text{desired}} = 0.1$, maintaining relative polynomial coefficients while achieving the desired interaction with the cascaded inner control loops.

The resulting controller coefficients are small ($\sim 10^{-2}$–10^{-3}), which is a direct consequence of the large bandwidth separation between inner (>1 kHz) and outer (~40 Hz) loops, gain multiplication from the cascade, and the need to preserve stability margins and avoid actuator saturation.

Table 4: RST Controller Parameters

Axis	$R(z^{-1})$	$S(z^{-1})$	T_0
Pitch	$1+0.0063z^{-1}+0.0089z^{-2}$	$0.0719-0.1039z^{-1}$	0.1
Roll	$1+0.0048z^{-1}+0.0032z^{-2}$	$-0.0262-0.0600z^{-1}$	0.1

All closed-loop poles lie strictly within the unit circle. Unity steady-state gain is achieved through the feedforward coefficient T_0, as confirmed by experimental step-response tests.

6.5 LQG Controller Design

The LQG controller combines optimal state-feedback (LQR) with a Kalman filter (Linear Quadratic Estimator) [22, 23]. Lin et al. [24] recently demonstrated embedded LQR on an inverted pendulum platform, validating the suitability of such methods for real-time control.

6.5.1 State-Space Realization

For each axis, the controllable canonical state-space realization $\dot{x} = Ax + Bu$, $y = Cx$ is obtained from the transfer functions (4)–(5):

$$A_r = \begin{bmatrix} -7.67 & -2023 \\ 1 & 0 \end{bmatrix}, \quad A_p = \begin{bmatrix} -6.256 & -683.5 \\ 1 & 0 \end{bmatrix}, \quad B = \begin{bmatrix} 1 \\ 0 \end{bmatrix} \tag{13}$$

with output matrices $C_r = [-1.8551 \;\; 36.2401]$ and $C_p = [-2.5961 \;\; 55.2026]$.

6.5.2 LQR Gain Design

The continuous-time LQR problem minimizes $J = \int_0^\infty (x^\top Q x + u^\top R u)\,dt$ with $Q = \text{diag}(1,2)$ and $R = 1$, penalizing poor tracking while avoiding aggressive inputs. The optimal gains, obtained by solving the algebraic Riccati equation, are $K_r = [0.064978,\ 0.000494]$ for roll and $K_p = [0.079650,\ 0.001463]$ for pitch.

6.5.3 Kalman Filter Design

Because the full state vector x is not directly measured, a Kalman filter estimates the states from the output y:

$$\dot{\hat{x}} = A\hat{x} + Bu + L(y - C\hat{x}) \tag{14}$$

The Kalman gain L is obtained by solving the dual Riccati equation. The BNO055 IMU already has an internal sensor fusion algorithm producing low-noise orientation, so the measurement noise covariance is set to $R_n = 0.5$ for pitch and $R_n = 2.0$ for roll. Process noise covariance is $Q_n = 0.1 \cdot I_2$ for both axes.

6.5.4 Discrete-Time Implementation

For embedded deployment, the continuous-time system is discretized with zero-order hold at $T_s = 0.0317\,\text{s}$, yielding discrete matrices (A_d, B_d, C_d). The Kalman gain is discretized as $L_d \approx L \cdot T_s$. The discrete-time observer equations are:

$$\hat{x}^-(k) = A_d\,\hat{x}(k-1) + B_d\,u(k-1) \tag{15}$$

$$\hat{x}(k) = \hat{x}^-(k) + L_d\big(y(k) - C_d\,\hat{x}^-(k)\big) \tag{16}$$

The resulting observer poles are 0.077 for pitch and -0.103 for roll, both well within the unit circle, ensuring rapid convergence.

6.5.5 Control Law

The LQG control law uses the estimated states:

$$u(k) = K_1\,e(k) - K_2\,\hat{x}_2(k) \tag{17}$$

where $e(k) = r(k) - y(k)$ is the tracking error and $\hat{x}_2(k)$ is the second estimated state (related to the output derivative). Using the Kalman-filtered state estimate instead of noisy numerical differentiation provides smooth tracking.

Table 5: LQG Controller Parameters

Axis	**LQR Gain K**	**Kalman Gain L_d**
Pitch	[0.079650, 0.001463]	[−0.167880, 0.011632]
Roll	[0.064978, 0.000494]	[−0.191099, 0.003226]

6.6 MRAC Design (Model Reference Adaptive Control)

The MRAC [25, 26] adapts the controller gain online to track a reference model output, providing robustness to payload variations.

6.6.1 Plant Parameter and Adaptation Rate

The key plant parameter used for initialization is $b = C_c B_c$, computed from the state-space realization:

- Roll: $b_r = -1.8551$
- Pitch: $b_p = -2.5961$

The theoretical adaptation rate, derived from Lyapunov stability analysis, is $\gamma_{\text{theory}} = \omega_n/(2|b|)$, yielding $\gamma_r = 0.54$ and $\gamma_p = 0.39$. However, these values are too aggressive for embedded deployment at 40 Hz due to measurement noise amplification and limited sampling rate. Through experimental tuning, a much smaller value of $\gamma = 0.001$ was selected for both axes.

Similarly, the initial gain $K_{\text{init}} = 1/|b|$ yields $\sim$0.54 (roll) and $\sim$0.39 (pitch), but these were reduced to $K_0 = 0.02$ for smoother transients during startup.

6.6.2 Reference Model

The ideal reference model is a second-order system with $\omega_n = 2\,\text{rad/s}$ and $\zeta = 0.95$. For computational efficiency on the microcontroller, this is simplified to a first-order low-pass filter with time constant $\tau = 0.5\,\text{s}$:

$$y_{m,k+1} = y_{m,k} + \frac{\Delta t}{\tau}\,(r_k - y_{m,k}) \tag{18}$$

6.6.3 Control and Adaptation Laws

The control law and MIT-rule adaptation with leakage are:

$$u_k = K_k \cdot e_{\text{track},k} \tag{19}$$

$$K_{k+1} = K_k + \gamma \Delta t\, e_{\text{track},k}\, e_k - \lambda\, \Delta t\,(K_k - K_{\text{nominal}}) \tag{20}$$

where $e_{\text{track},k} = y_{m,k} - y_k$ is the tracking error (model output minus plant output), $e_k = r_k - y_k$ is the reference error and λ is the leakage coefficient that prevents parameter drift when the tracking error is small.

The gain is saturated to $K \in [0.01, 0.1]$ and the control output is bounded to $u \in [-5^\circ, 5^\circ]$ to prevent damaging the actuators and preserve stability margins.

6.7 Height Control

The vertical-axis controller passes raw ToF measurements through a 5-sample running-average filter and applies exponential filtering: $e_s(k) = (1-\beta)\,e_s(k-1) + \beta\,(d_f(k) - r_d)$ with $\beta = 0.5$. Chatter is suppressed with a 5 mm deadband. Motor command $u_h(k)$ equals $\text{sat}(\alpha\, e_s(k))$ with $\alpha = 0.5$. The two servos holding the ToF sensor vertical are controlled by a second BNO055 IMU. The true distance to the target is $d_{\text{real}} = d_\perp / (|\cos\phi|\,|\cos\theta|)$.

7 Experimental Results

7.1 Test Scenarios

Three payload scenarios evaluate controller robustness as mass increases:

1. **Empty cup**: cup only, total mass 334 g.
2. **Half-full**: ∼50% filled, total mass 467 g.
3. **Three-quarters full**: ∼75% filled, total mass 581 g.

Each run: 18 s steady-state ($t \in [4, 22]$ s) then 63 s disturbance ($t \in [22, 85]$ s) with automated tilt mechanism.

7.2 Composite Performance Assessment (CPA)

The CPA metric, inspired by multiobjective performance criteria [27], aggregates four metrics into a single normalized score:

$$\text{CPA} = \frac{\sum_i w_i \hat{m}_i}{\sum_i w_i}, \qquad \hat{m}_i = \min(m_i / m_{i,\max},\ 1) \tag{21}$$

Table 6: CPA Weights and Normalization Bounds

Metric	Weight	Max Value
IAE	0.45	1000
Overshoot / Max Deviation	0.25	30°
RMSE	0.20	10°
CE $\sum \lvert u_k - u_{k-1} \rvert$	0.10	50

7.3 Steady-State Tracking Performance

Table 7: Steady-State Performance Roll Axis

	Empty Cup				Half-Full				3/4 Full			
Metric	PID	RST	LQG	MRAC	PID	RST	LQG	MRAC	PID	RST	LQG	MRAC
Peak [°]	3.05	**2.02**	2.07	4.97	6.79	5.58	**3.02**	9.17	3.31	13.19	**1.49**	5.68
S.S. Err. [°]	−0.57	−1.72	**0.59**	2.27	**0.37**	5.30	1.68	5.20	1.53	12.45	**0.82**	5.46
RMSE [°]	0.78	1.07	**0.59**	3.03	**0.89**	4.77	1.46	5.17	1.82	11.85	**0.58**	4.82
IAE	11.7	16.3	**9.9**	52.2	**11.9**	82.0	23.8	92.2	30.0	202.1	**9.2**	78.7
CPA	0.057	0.054	**0.040**	0.127	**0.093**	0.186	0.075	0.224	0.087	0.409	**0.036**	0.180

Table 8: Steady-State Performance Pitch Axis

	Empty Cup				Half-Full				3/4 Full			
Metric	PID	RST	LQG	MRAC	PID	RST	LQG	MRAC	PID	RST	LQG	MRAC
Peak [°]	0.94	0.55	**0.32**	0.42	5.80	**0.24**	1.10	0.61	1.20	**0.57**	0.79	4.23
S.S. Err. [°]	0.64	0.34	**0.20**	−0.15	−0.17	**0.08**	−0.32	−0.45	**−0.12**	0.45	0.37	−1.99
RMSE [°]	0.67	0.30	**0.14**	0.23	0.87	**0.08**	0.42	0.45	0.53	0.41	**0.32**	1.66
IAE	9.89	4.77	**2.12**	3.87	7.46	**1.18**	6.74	7.95	7.29	6.96	**4.85**	25.29
CPA	0.031	0.022	**0.010**	0.013	0.075	**0.014**	0.025	0.018	0.031	0.026	**0.020**	0.081

LQG exhibits the lowest steady-state CPA in roll for all three cases and in pitch for empty and 3/4-full payloads. RST has the lowest pitch CPA at half-fill.

7.4 Disturbance Rejection Performance

Table 9: Disturbance Rejection Roll Axis

	Empty Cup				Half-Full				3/4 Full			
Metric	PID	RST	LQG	MRAC	PID	RST	LQG	MRAC	PID	RST	LQG	MRAC
Max [°]	11.7	19.1	**6.1**	15.3	7.7	17.3	**6.2**	16.8	8.9	22.6	**3.1**	21.1
RMSE [°]	1.66	6.02	**1.48**	3.83	**1.53**	7.16	1.62	6.17	**1.77**	9.98	3.14	7.70
CE	23.5	15.3	33.8	**8.4**	26.1	18.4	34.3	**9.5**	27.5	19.1	72.8	**10.4**
CPA	0.210	0.449	**0.185**	0.309	**0.179**	0.499	0.192	0.441	**0.205**	0.680	0.403	0.558

Table 10: Disturbance Rejection Pitch Axis

	Empty Cup				Half-Full				3/4 Full			
Metric	PID	RST	LQG	MRAC	PID	RST	LQG	MRAC	PID	RST	LQG	MRAC
Max [°]	6.24	3.75	**3.51**	8.65	7.04	4.22	**3.76**	10.7	6.18	**4.71**	5.01	10.43
RMSE [°]	2.21	1.36	**1.16**	3.49	2.59	1.55	**1.21**	3.75	2.53	1.60	**1.61**	4.68
CE	11.5	17.4	14.2	**3.6**	13.4	17.5	13.4	**4.1**	13.5	21.0	15.1	**4.6**
CPA	0.166	0.122	**0.106**	0.221	0.191	0.136	**0.108**	0.250	0.189	0.148	**0.139**	0.312

For disturbance rejection tests, LQG has lowest pitch CPA in all cases. For roll, LQG performed best at empty, while PID was the most robust across half-full and 3/4-full. MRAC required the least CE in all disturbance tests but had the worst tracking.

7.5 CPA Summary

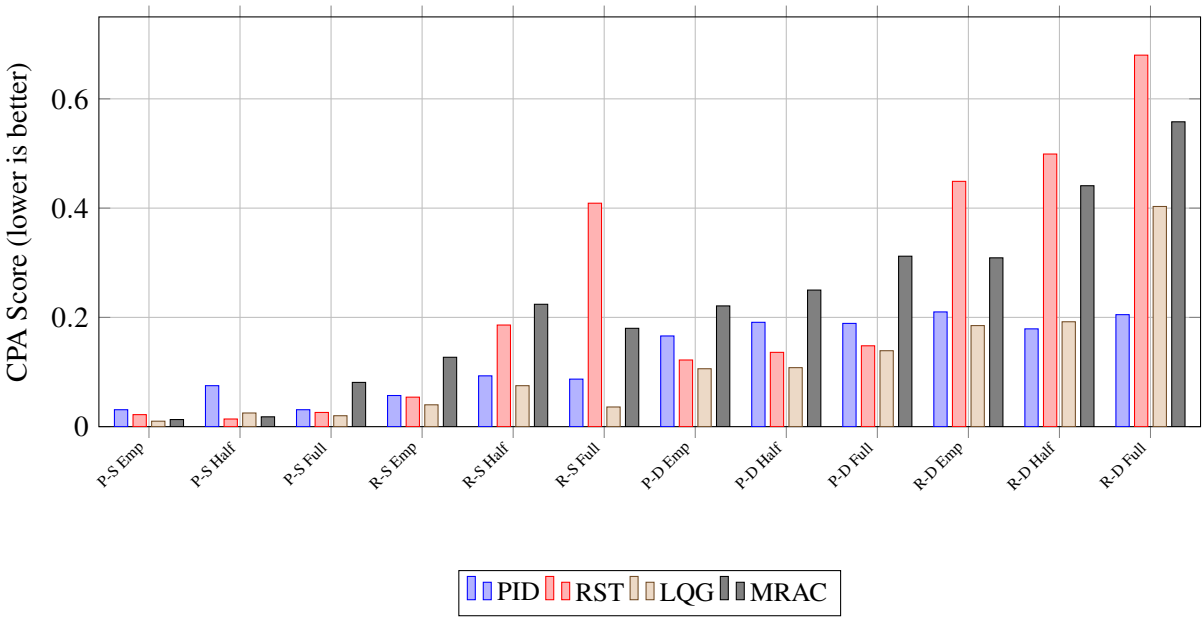

Figure 5: CPA scores across all conditions. P=Pitch, R=Roll, S=Steady, D=Disturbance. Lower is better.

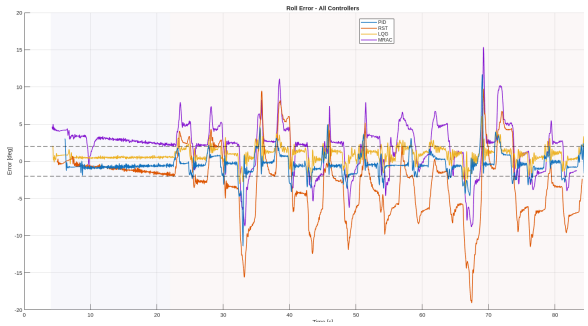

(a) Roll error — Empty Cup

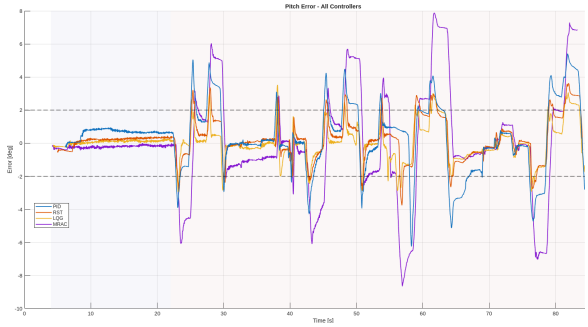

(b) Roll error — Half-Full

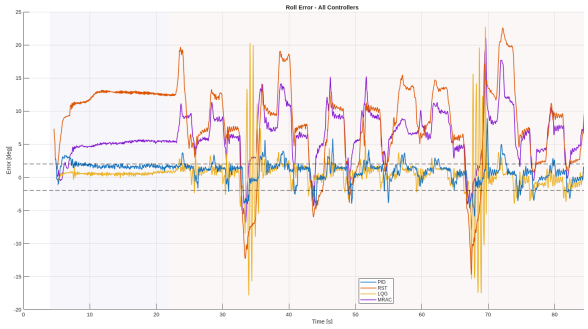

(c) Roll error — 3/4 Full

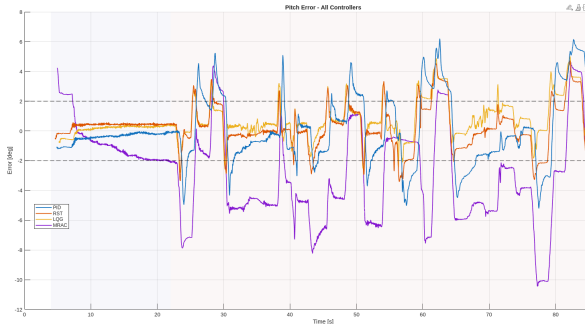

(d) Pitch error — Empty Cup

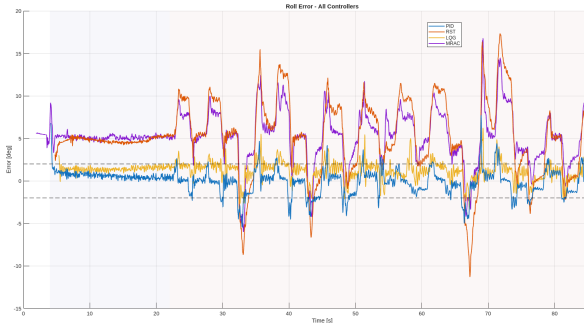

(e) Pitch error — Half-Full

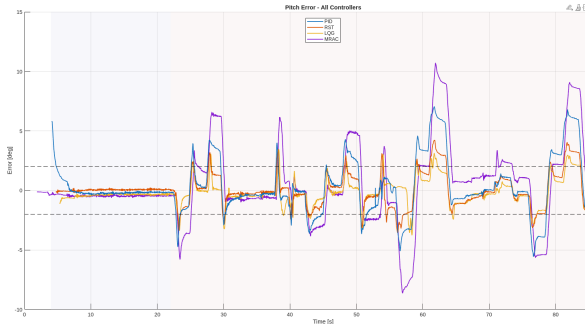

(f) Pitch error — 3/4 Full

Figure 6: Error time series for all controllers across three payload configurations.

8 Conclusions

The platform and methodology for *Hold My Coffee*, an experimental platform for actively stabilizing beverage containers, was designed and introduced. Four controllers, Proportional-Integral-Derivative (PID), R-S-T Polynomial Controller (RST), Linear Quadratic Gaussian (LQG), and Model Reference Adaptive Control (MRAC), were implemented on common embedded hardware and tested in each of three payload configurations (empty, half-full, and three-quarters full) in a standardized set of experiments using a CPA metric.

8.1 Highlights

- **LQG** exhibited the best overall control performance, achieving the lowest CPA across steady-state roll (all cases), steady-state pitch (empty and full only), and pitch disturbance rejection (all cases). The optimal state feedback, combined with Kalman filtering, effectively rejects disturbances producing the smoothest tracking response.

- **PID** roll disturbance rejection had the highest tolerance to increasing payload mass and performs adequately in all cases. PID control is by far the easiest controller to implement making it the most attractive option for practical deployment.

- **RST** achieves the lowest CPA on steady-state pitch at half-fill ($CPA = 0.014$) but varying payload drastically reduces its roll performance (CPA increases from 0.054 when empty to 0.409 when 3/4 full), demonstrating a sensitivity to model uncertainty.

- **MRAC** required the least CE for all disturbance rejection experiments. However, due to its lowest outer-loop frequency, convergence of the adaptation law was likely limited, resulting in the poorest tracking performance.

8.2 Challenges

- Roll operates near a $\pm 180°$ discontinuity in quaternions requiring `atan2`-based angle normalization.
- Cascaded architecture ($\sim$40 Hz outer, kHz inner) limits fast dynamics to conservative outer-loop gains.
- Closed-source Moteus firmware inhibits analytic inner-loop modeling; inner-loop dynamics must be identified as a black-box.
- See above.
- Inner-loop dynamics limit MRAC adaptation law convergence due to low (40 Hz) outer-loop rate.

8.3 Future Work

- Robustification of RST and LQG designs (integral augmentation, gain scheduling).
- Implement gain-scheduled designs for each controller in each payload condition.
- Run outer-loop control at a higher rate and develop better MRAC reference models.
- Explore alternative CPA weighting matrices and test with dynamic liquid payload.

References

[1] J. M. Hilkert, "Inertially stabilized platform technology, concepts and principles," *IEEE Control Systems Magazine*, vol. 28, no. 1, pp. 26–46, 2008.

[2] M. K. Masten, "Inertially stabilized platforms for optical imaging systems," *IEEE Control Systems Magazine*, vol. 28, no. 1, pp. 47–64, 2008.

[3] P. J. Kennedy and R. L. Kennedy, "Direct versus indirect line-of-sight (los) stabilization," *IEEE Transactions on Control Systems Technology*, vol. 11, no. 1, pp. 3–15, 2003.

[4] D.-H. Lee, D.-Q. Tran, Y.-B. Kim, and S. Chakir, "A robust double active control system design for disturbance suppression of a two-axis gimbal system," *Electronics*, vol. 9, no. 10, p. 1638, 2020.

[5] X. Hu, S. Han, Y. Liu, and H. Wang, "Two-axis optoelectronic stabilized platform based on active disturbance rejection controller with LuGre friction model," *Electronics*, vol. 12, no. 5, p. 1261, 2023.

[6] W. Feng and X. Zhang, "Controller design for three-axis stabilized platform using adaptive global fast terminal sliding mode control with non-linear differentiator," *Energies*, vol. 14, no. 20, p. 6532, 2021.

[7] D. Song, X. Xiao, J. Ma, and L. Zhang, "Modeling and control system experiment of a novel series three-axis stable platform," *Mechanics of Solid and Fluid Structures (Mech. Sci.)*, vol. 15, no. 1, pp. 209–221, 2024.

[8] Z.-Y. Lv, S. Li, Y. Wu, and Q.-G. Wang, "Adaptive control for a quadrotor transporting a cable-suspended payload with unknown mass in the presence of rotor downwash," *IEEE Transactions on Vehicular Technology*, vol. 70, no. 9, pp. 8505–8518, 2021.

[9] J. Jo, G. Park, and Y. Oh, "Robust walking stabilization strategy of humanoid robots on uneven terrain via qp-based impedance/admittance control," *Robotics and Autonomous Systems*, vol. 154, p. 104148, 2022.

[10] F. Wang, R. Wang, E. Liu, and W. Zhang, "Stabilization control method for two-axis inertially stabilized platform based on active disturbance rejection control with noise reduction disturbance observer," *IEEE Access*, vol. 7, pp. 99521–99529, 2019.

[11] X. Yao, L. Zhang, and Y. Cui, "Adaptive refined disturbance observer-based velocity-tracking control for gimbal servo system with multiple disturbances," *IEEE Transactions on Systems, Man, and Cybernetics: Systems*, 2024.

[12] B. Ugurlu, K. Kotaka, and T. Narikiyo, "Actively-compliant locomotion control on rough terrain: Cyclic jumping and trotting experiments on a stiff-by-nature quadruped," in *2013 IEEE international conference on robotics and automation*, pp. 3313–3320, IEEE, 2013.

[13] L. Zhao and Y.-y. Shi, "Disturbance suppression of gimbal servo motor based on improved ADRC and ISMC method," *Journal of Electrical Engineering & Technology*, vol. 19, no. 7, pp. 4285–4295, 2024.

[14] H. Kizmaz, "Comparative analysis of optimal control strategies: LQR, PID, and sliding mode control for DC motor position performance," *Gazi University Journal of Science Part A: Engineering and Innovation*, vol. 10, no. 4, pp. 571–592, 2023.

[15] J. Kolinský, P. Jonáš, J. Hanzlík, J. Královec, and P. Horáček, "PlantPAx MPC: Model predictive control embedded in programmable controller and its application," in *2025 25th International Conference on Process Control (PC)*, pp. 1–6, IEEE, 2025.

[16] M. Okasha and H. Taha, "Design and experimental comparison of pid, lqr, and mpc stabilizing controllers for parrot mambo mini-drone," *Aerospace*, vol. 9, no. 6, p. 298, 2022.

[17] S. K. Valluru, M. Singh, M. Singh, and V. Khattar, "Experimental validation of PID and LQR control techniques for stabilization of cart inverted pendulum system," in *2018 3rd IEEE International Conference on Recent Trends in Electronics, Information & Communication Technology (RTEICT)*, pp. 708–712, 2018.

[18] Y. Karabacak, Y. Karakaya, and I. Kucuk, "Performance comparison of pid and lqr controllers for control of non-linear magnetic levitation system," *Dokuz Eylül University Faculty of Engineering Journal of Science and Engineering*, vol. 25, no. 74, pp. 407–421, 2023.

[19] Y. Chen and G. Yang, "Dynamic simulation of tank stabilizer based on adaptive control," *Proceedings of the Institution of Mechanical Engineers, Part C: Journal of Mechanical Engineering Science*, vol. 233, no. 9, pp. 3038–3049, 2019.

[20] S. Skogestad and C. Grimholt, "The simc method for smooth pid controller tuning," in *PID control in the third millennium: Lessons learned and new approaches*, pp. 147–175, Springer, 2012.

[21] A. Maarouf, I. Ahmad, and Y. Bin Salamah, "Two-degree-of-freedom digital RST controller synthesis for robust string-stable vehicle platoons," *Symmetry*, vol. 17, no. 12, p. 2067, 2025.

[22] M. Rani and S. S. Kamlu, "Optimal lqg controller design for inverted pendulum systems using a comprehensive approach," *Scientific Reports*, vol. 15, no. 1, p. 4692, 2025.

[23] M. Latroch, A. Aissa-Bokhtache, and A. Toualbia, "A proposed empirical method of weighing matrices determination in LQ controller applied," in *2023 2nd International Conference on Electronics, Energy and Measurement (IC2EM)*, pp. 1–7, IEEE, 2023.

[24] M.-H. Lin, J.-Q. Huang, Y.-H. Tsai, C.-C. Chang, and C.-Y. Chen, "Linear quadratic regulator control of rotary inverted pendulum using elvis iii embedded platform," *Engineering Proceedings*, vol. 92, no. 1, p. 46, 2025.

[25] Z. Cheng, B. Zhang, Y. Zhang, X. Liu, Y. Wei, and W. Fang, "A new design method for model reference adaptive control systems based on Lyapunov stability theory," *Journal of Computational Methods in Sciences and Engineering*, p. 14727978251321464, 2025.

[26] S. Ladaci, S. Khelas, A. Ynineb, D. Copot, and C. Ionescu, "Fractional order mrac control design for a lightning system based on a fractional order second degree model," *IFAC-PapersOnLine*, vol. 58, pp. 95–100, 2024.

[27] M. A. Sahib and B. S. Ahmed, "A new multiobjective performance criterion used in pid tuning optimization algorithms," *Journal of Advanced Research*, vol. 7, no. 1, pp. 125–134, 2016.